1.2.3 High Energy Pyroelectric Sensors

1mJ to 40J

Features

- Fan or conduction cooled for high average power capability
- BF coating with diffuser for highest damage threshold
- Wide spectral range. Measure YAG and harmonics and many more
- Rep rates up to 250Hz
- Measure lasers with pulse widths up to 20ms

FPE80BF-DIF-C

PE80BF-DIF-C

Model	FPE80BF-DIF-C					PE80BF-DIF-C				
Use	**High average power pulsed lasers**					**Large aperture pulsed lasers**				
Diffuser	Fixed					Fixed				
Aperture mm	Ø53					Ø67				
Absorber Type	BF with diffuser					BF with diffuser				
Spectral Range µm [a]	0.355 – 2.2, 2.94					0.355 – 2.2, 2.94				
Surface Reflectivity % approx.	25					25				
Calibration Uncertainty ±% [a]	3					3				
Max Pulse Width Setting [d]	1ms	2ms	5ms	10ms	20ms	1ms	2ms	5ms	10ms	20ms
Energy Scales	40J to 40mJ	40J to 40mJ	40J to 40mJ	40J to 40mJ	40J to 40mJ	40J to 40mJ	40J to 40mJ	40J to 40mJ	40J to 40mJ	40J to 40mJ
Lowest Measurable Energy mJ [c, f]	1	1	1	2	2	4	4	4	4	4
Max Pulse Width ms	1	2	5	10	20	1	2	5	10	20
Maximum Pulse Rate pps	250Hz	100Hz	50Hz	40Hz	20Hz	250Hz	100Hz	50Hz	40Hz	20Hz
Noise on Lowest Range µJ	200	300	300	300	300	100	200	200	200	200
Additional Error with Frequency %	±1.5% to 100Hz ±2.5% to 150Hz ±4.5% to 250Hz	±1.5%	±1.5%	±1.5%	±1.5%	±1.5% to 100Hz ±2.5% to 150Hz ±4.5% to 250Hz	±1.5%	±1.5%	±1.5%	±1.5%
Linearity with Energy for >10% of full scale [c]	±1.5%					±2%				
Damage Threshold J/cm² [b]										
7ns	4					4				
1µs	8					5				
300µs	30					20				
2ms	50					60				
Maximum Average Power W	200					40				
Maximum Average Power Density at Maximum Power W/cm²	120 [e]					200 [e]				
Uniformity over surface	±2% over central 40mm					±2% over central 60mm				
Cooling	fan (see page 148 for details)					conduction				
Weight kg	1.2					0.5				
Compliance	CE, UKCA, China RoHS					CE, UKCA, China RoHS				
Version										
Part Number	**7Z02950**					**7Z02954**				

Note: (a) Calibration accuracy at various wavelengths as specified here. At other wavelengths, there may be an additional error up to the value given. Specified wavelengths: 355nm, 532nm, 1064nm, 2100nm and 2940nm. Max additional error at other wavelengths not specified above: ±2%. <250nm not calibrated.

Note: (b) For wavelengths >2.1µm, derate to 10% of above values. For wavelengths below 600nm, derate to 60% of given values. For wavelengths below 240nm, derate to 1J/cm². For beam size ≤16mm. For 32mm beam, derate to 50% of above values.

Note: (c) With the "user threshold" setting set to minimum. For other settings, the spec is for >10% of full scale or greater than twice the "user threshold", whichever is greater. The user threshold is not available with LaserStar, Nova, Pulsar, USBI and Quasar. For these meters, the threshold is set to minimum and the linearity spec is >10% of full scale. The PE-C series will only operate with Nova meter with an additional adapter Ophir P/N 7Z08272 (see page 148). The adapter can introduce up to 1% additional measurement error. The user threshold feature allows adjustment of the internal threshold up to 25% of full scale if desired to avoid false triggering in noisy environments. For further information, see the FAQs on our Website.

Note: (d) With the LaserStar, Pulsar, USBI, Quasar and Nova with adapter only 2 of the pulse width settings are available, the 1ms and 10ms settings.

Note: (e) For maximum power. For lower powers the damage threshold is correspondingly higher.

Note: (f) For powers below 50W it is recommended to work with the fan off. If working with the fan on, the threshold must be set to 6% and the lowest measurable energies will be as follows:

Max Pulse Width Setting	1ms	2ms	5ms	10ms	20ms
Lowest Measurable Energy mJ	4mJ	4mJ	4mJ	4mJ	4mJ

* For drawings please see page 146

FPE80BF-DIF-C

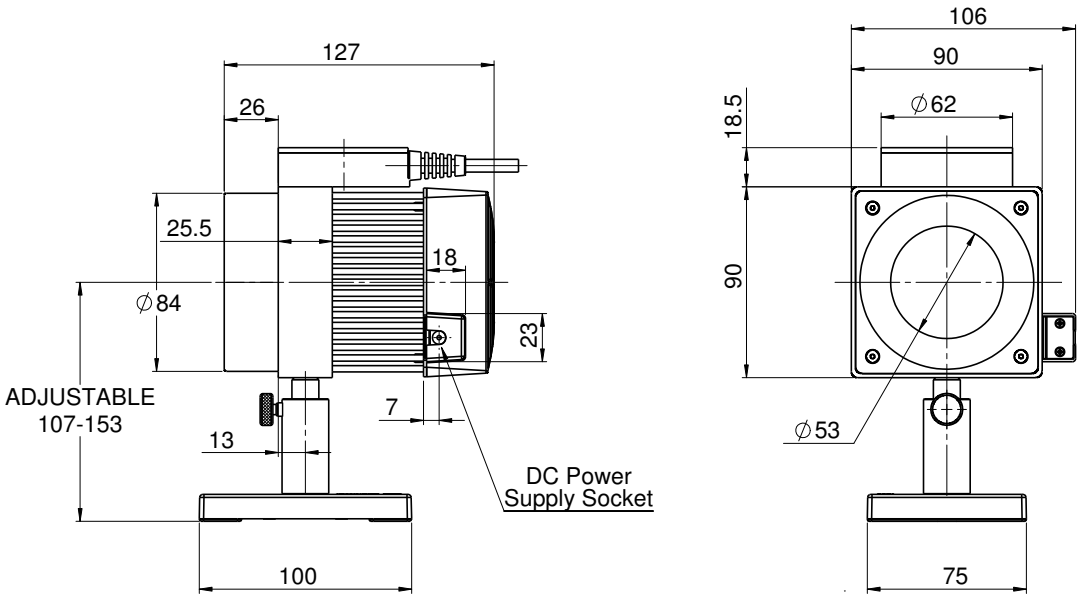
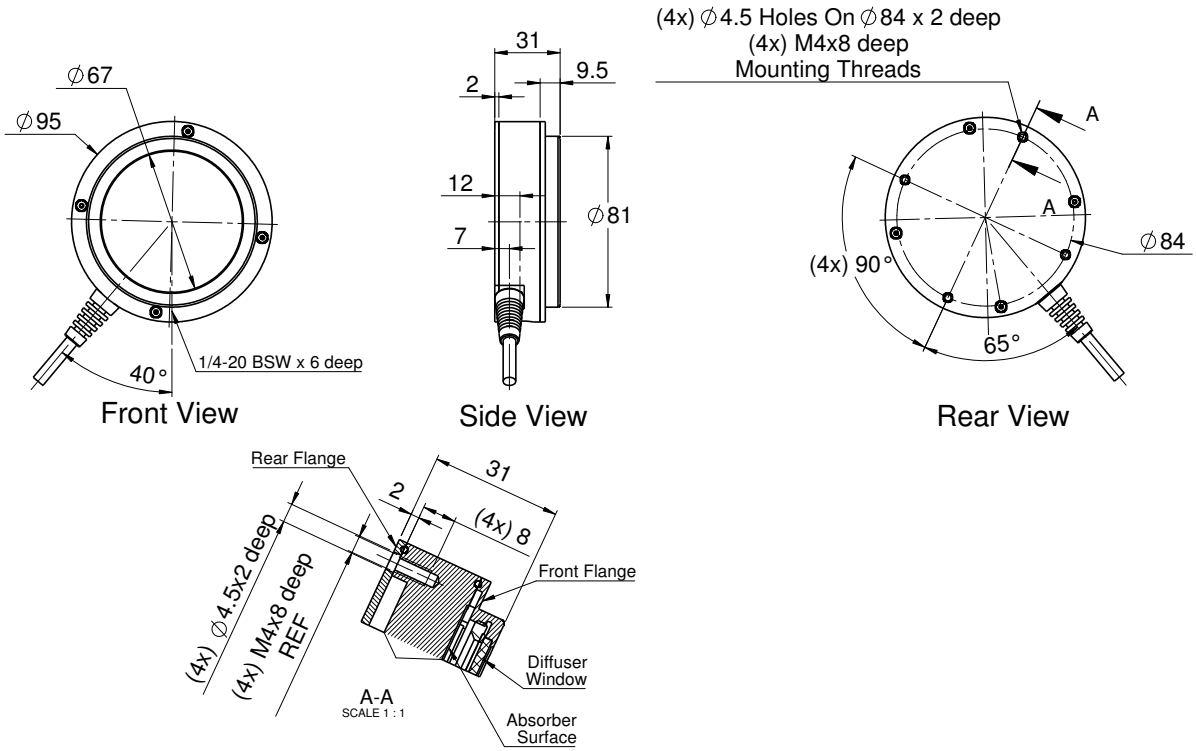
PE80BF-DIF-C