1.2.3 High Energy Pyroelectric Sensors

10µJ to 40J

Features

- Removable diffusers
- PE50-DIF-ER-C mainly for NIR lasers
- PE100BF-DIF-C for very large beams
- Rep rates up to 10kHz
- Measure lasers with pulse widths up to 20ms

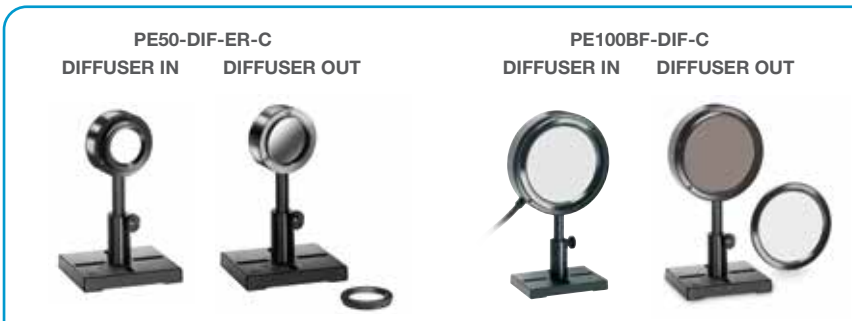

Model	PE50-DIF-ER-C										PE100BF-DIF-C									
Use	**Mainly for 1064nm, 2.1µm and 2.94µm**										**Very large aperture**									
Diffuser	Diffuser out					Diffuser in					Diffuser out					Diffuser in				
Aperture mm	Ø46					Ø33					Ø96					Ø85				
Absorber Type	Metallic					Metallic with diffuser					BF					BF with diffuser				
Spectral Range µm [a]	0.19 - 3					0.4 - 3					0.15 - 3					0.4 - 2.5				
Surface Reflectivity % approx.	50					50					20					50				
Calibration Uncertainty ±% [a]	3					4					3					4				
Max Pulse Width Setting [c]	2µs	30µs	500µs	1ms	5ms	2µs	30µs	500µs	1ms	5ms	1ms	2ms	5ms	10ms	20ms	1ms	2ms	5ms	10ms	20ms
Energy Scales	10J to 200µJ	10J to 200µJ	10J to 2mJ	10J to 2mJ	10J to 2mJ	30J to 600µJ	30J to 600µJ	30J to 6mJ	30J to 6mJ	30J to 6mJ	10J to 2mJ	10J to 20mJ	10J to 20mJ	10J to 20mJ	10J to 20mJ	40J to 40mJ	40J to 40mJ	40J to 40mJ	40J to 40mJ	40J to 40mJ
Lowest Measurable Energy mJ [b]	0.01	0.01	0.06	0.08	0.1	0.05	0.05	0.3	0.4	0.5	0.4	0.7	1.5	1.5	1.5	2	3	5	5	5
Max Pulse Width ms	0.002	0.03	0.5	1	5	0.002	0.03	0.5	1	5	1	2	5	10	20	1	2	5	10	20
Maximum Pulse Rate pps	10kHz	5kHz	800Hz	400Hz	100Hz	10kHz	5kHz	800Hz	400Hz	100Hz	200Hz	100Hz	50Hz	35Hz	25Hz	200Hz	100Hz	50Hz	35Hz	25Hz
Noise on Lowest Range µJ	1	1	6	10	20	5	5	30	50	100	80	150	250	200	200	300	500	1000	600	600
Additional Error with Frequency %	±2% to 2kHz ±4.5% to 5kHz	±2%	±2%	±2%	±1% to 80Hz	±2% to 2kHz ±4.5% to 5kHz	±2%	±2%	±2%	±1% to 80Hz	±1% to 100Hz ±2.5% to 150Hz ±4.5% to 200Hz	±1%	±1%	±1%	±1%	±1% to 100Hz ±2.5% to 150Hz ±4.5% to 200Hz	±1%	±1%	±1%	±1%
Linearity with Energy for > 10% of full scale [b]	±1.5%										±1%									
Maximum Energy Density J/cm²																				
7ns	0.1					1.5					0.8					3				
1µs	0.2					3					1					3				
300µs	2					20					5					10				
2ms	6					60					10					25				
Maximum Average Power W	15, 25 with optional heat sink (P/N 7Z08267)					40, 60 with optional heat sink (P/N 7Z08267)					25					50				
Maximum Average Power Density W/cm²	20					500					20					500				
Weight kg	0.3										1.2									
Compliance	CE, UKCA, China RoHS										CE, UKCA, China RoHS									
Version																				
Part Number: Standard Sensor	**7Z02948 (1.5m cable)**										**7Z02942 (1.5m cable)**									
Sensor with different cable length	**7Z02948B (5m cable)**										**7Z02942B (5m cable), 7Z02942C (10m cable)**									
Note: (a)	Calibrated at 532nm and 1064nm only					Calibrated at 1064nm, 2100nm and 2940nm					Calibrated at 532nm and 1064nm only					Calibrated at 532nm, 1064nm and 1550nm only				

Note: (b) With the "user threshold" setting set to minimum. For other settings, the spec is for >10% of full scale or greater than twice the "user threshold", whichever is greater. For use with Centauri, StarBright, StarLite, Nova II, Vega, Juno, Juno+, Juno-RS and EA-1. The sensors will operate with older Ophir meters and PC interfaces but do not support the threshold function and may give inaccurate readings with the diffuser in and therefore it is not recommended to use these sensors with older Ophir meters and PC interfaces. The user threshold feature allows adjustment of the internal threshold up to 25% of full scale if desired to avoid false triggering in noisy environments. For further information, see the FAQs on our Website.

Note: (c) With the LaserStar, Pulsar, USBI, Quasar and Nova with adapter only 2 of the 5 pulse width settings are available. For the PE50-DIF-ER-C, the 30µs and 1ms settings and for the PE100BF-DIF-C, the 1ms and 10ms settings. Furthermore, with the diffuser mounted, the sensor may saturate at lower than the maximum energy in some cases. Therefore it is recommended to use these sensors with the newer meters/PC interfaces.

* For drawings please see page 144

PE50-DIF-ER-C

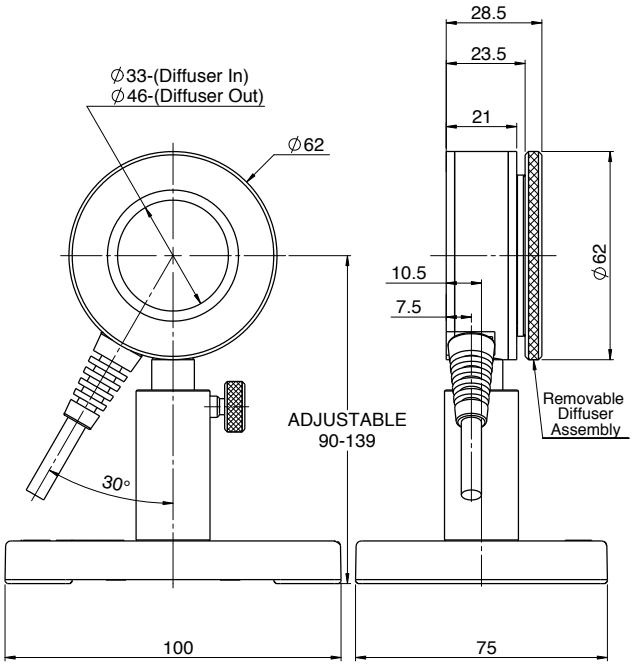
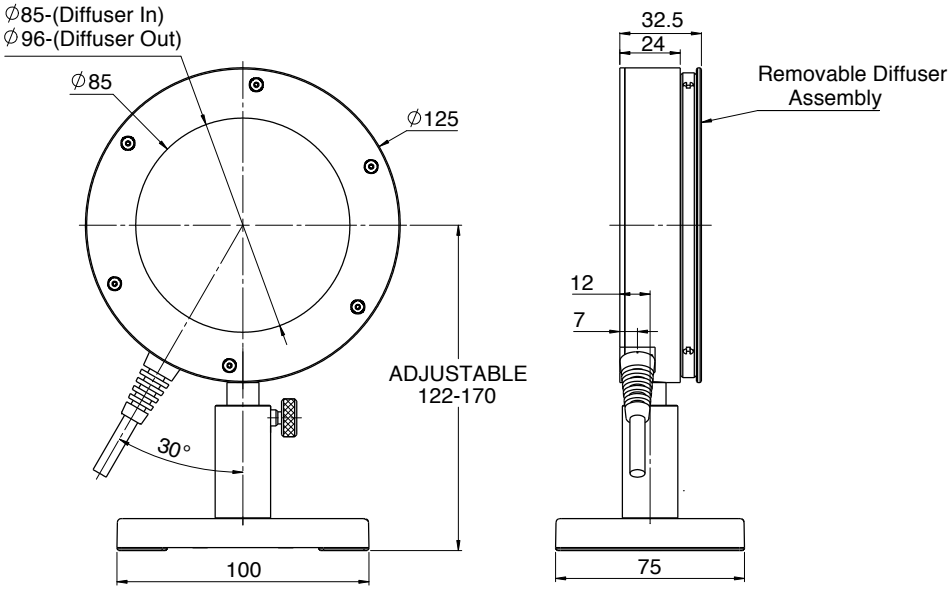
PE100BF-DIF-C