1.4.2.3 Standard Customized Solutions (OEM) Thermal Sensors

300mW to 100W

Features

- Conduction cooled
- UAF version can give analog voltage output or digital RS232 output and can measure power or energy. Can also have multiple switchable ranges and/or multiple switchable wavelengths
- UAU and UAE versions are similar to the UFA version but UAU operates via the USB terminal of the PC and UAE via an Ethernet connection

L30C-SH / UAF / UAU / UAE

L30C-LP2-26-SH

These specifications refer to standard OEM sensors, and are to be understood as generic, describing sensor families. Ophir will be happy to help you with a specific solution for your particular application.

Model	L30C-SH	L30C-LP2-26-SH	L30C-UAF	L30C-UAU / L30C-UAE
Type	Smart sensor	Smart sensor for high powers and energies	RS232 or Analog output	UAU – USB compatible output UAE – Ethernet output
Features	**Medium aperture smart sensor**	**High pulse energy and intermittent power**	**Medium aperture, built in amplifier**	**Medium aperture, built in amplifier**
Absorber Type	Broadband	LP2	Broadband	Broadband
Spectral Range µm	0.19 - 11	0.25 – 2.2	0.19 - 11 [c]	0.19 - 11 [c]
Absorption	~88%	>94% from 0.25 to 1.1µm	~88%	~88%
Aperture mm	Ø26	Ø26	Ø26	Ø26
Power Mode				
Maximum power [a] free standing	10W continuous, 100W for 2 min	10W continuous, 100W for 2 min	10W continuous, 100W for 2 min	10W continuous, 100W for 2 min
heat sinked	100W	100W	100W	100W
Minimum power	300mW	300mW	300mW	300mW
Power Noise Level	15mW	15mW	15mW	15mW
Maximum Average Power Density kW/cm²	14 at 100W 28 at 10W	42 at 100W	14 at 100W 28 at 10W	14 at 100W 28 at 10W
Response Time (0-95%), typ. (sec)	1.5	1.5	1.5	1.5
Calibration Uncertainty ±%	1.9	1.9	1.9	1.9
Power Accuracy ±% at calibrated wavelength	3	3 [d]	3	3
Linearity with Power ±%	1.5	1.5	1.5	1.5
Amplifier power supply	NA	NA	+6V to +24V	UAU - Via Host USB UAE +6V to +24V
Energy Mode				
Maximum Energy	100J	2000J	100J	100J
Minimum Energy	30mJ	30mJ	30mJ	30mJ
Energy Accuracy ±% at calibrated wavelength	5	5 [e]	5	5
Maximum Energy Density J/cm²				
7ns	0.3	0.1	0.3	0.3
0.5ms	5	50	5	5
2ms	10	130	10	10
10ms	30	400	30	30
>300ms	NA	See below [f, g]	NA	NA
Cooling	Conduction	Conduction	Conduction	Conduction
Connections	Ophir smart plug	Ophir smart plug	6 pin Molex [b]	UAU - Mini B USB connector UAE - Ethernet for communication M12 5 pin for power
Dimensions	60x60x38mm	60x60x38mm	60x60x38mm	60x60x38mm
Compliance	CE, UKCA, China RoHS	CE, UKCA, China RoHS	RoHS, China RoHS	RoHS, China RoHS
Part number	**773434**	**7Z02775**	**Consult Ophir Representative**	**Consult Ophir Representative**

Note: (a) With analog "UAF" versions, sensor voltage output is accurate up to 2v below lowest level of supply voltage, taking into account supply voltage ripple

Note: (b) 6 pin Molex connections: RS232 input, Ground, +Voltage, Analog signal out, high/low voltage or switch input when used, RS232 output

Note: (c) Calibrated at customer selected wavelength

Note: (d) Above 1.1µm there is an additional calibration uncertainty of up to 2%

Note: (e) From 20J to 2000J

Note: (f) Long pulses (0.5 – 4s) can be used to measure power of high power lasers by measuring the energy of a short exposure. The StarBright, Juno, Juno+, Juno-RS and Centauri meters have a Pulsed Power mode where the user may specify the pulse width and get a reading directly in units of power for this short exposure energy measurement. See also page 110

Note: (g) Recommended exposure times and 1/e² Gaussian beam diameters for very long pulses. Total energy for a series of measurements should not exceed 2kJ. Recommended time between shots 12s.

Laser Power W	Recommended Exposure s	Number of shots before cooling down	Min 1/e² beam dia. mm
100	4	20	9
500	1	20	9
1000	1	10	13
2000	1	5	17
4000	0.5	5	22

* For drawings please see page 161

* For UAE & UAU drawings please see pages 168-169

L30C-SH / L30C-LP2-26-SH

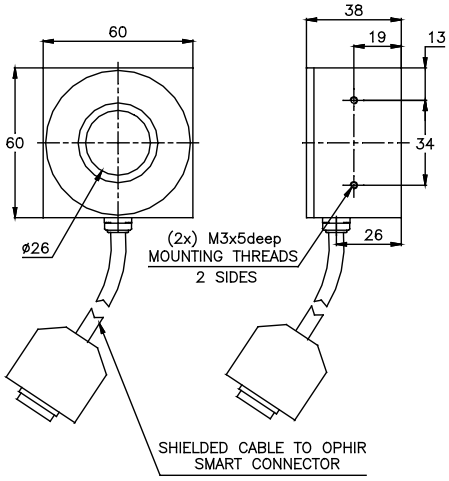

L30C-UAF

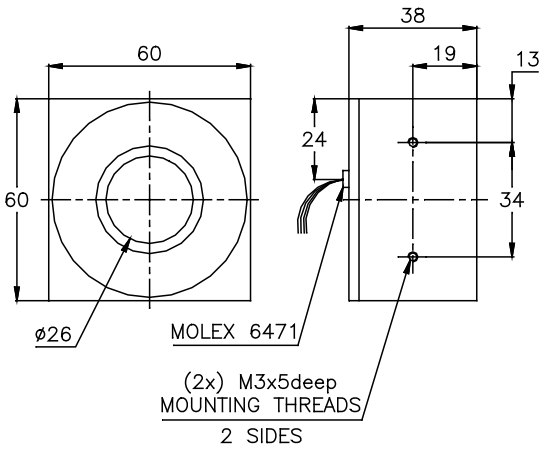

UAE Drawings

20C-UAE

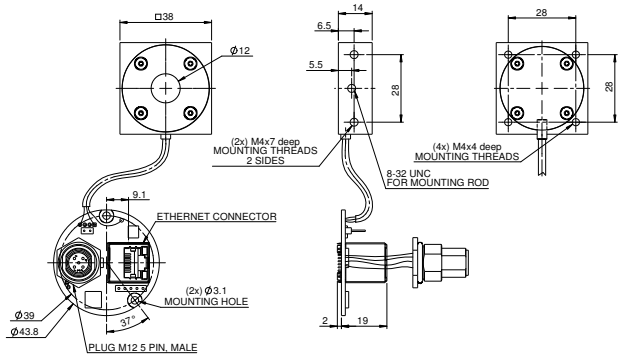

L30C-UAE

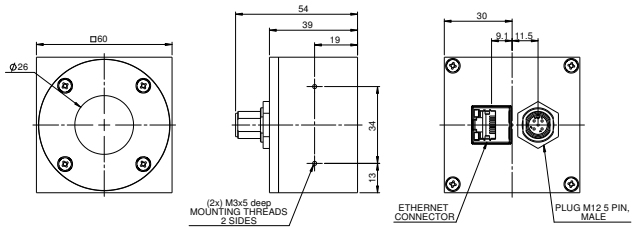

100C-UAE

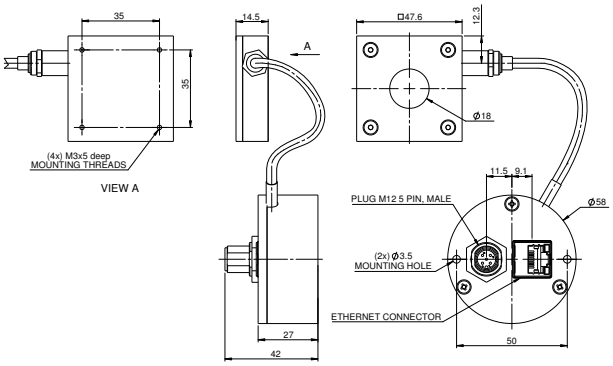

150C-UAE

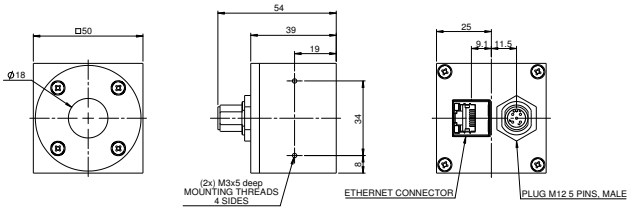

150W-UAE

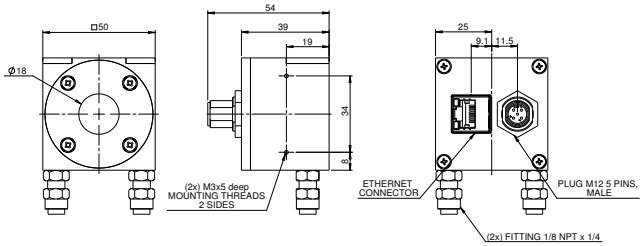

L150C-UAE

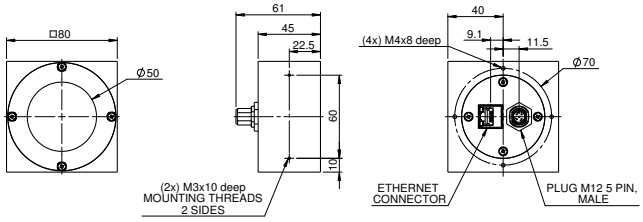

L250W-UAE / L300W-UAE

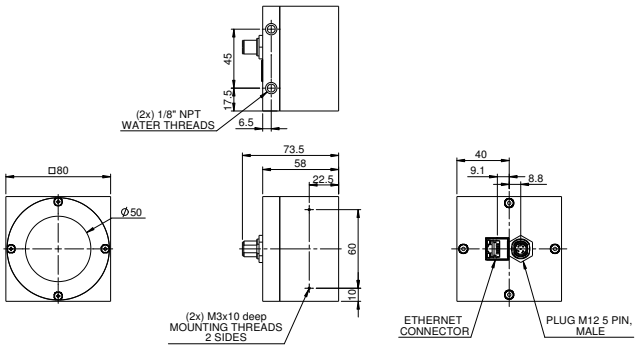

600W-UAE

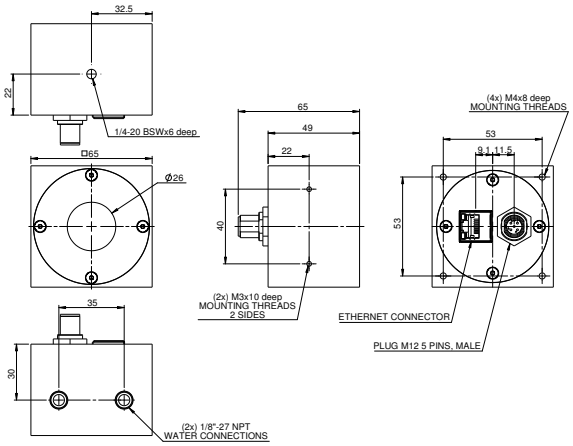

UAU Drawings

20C-UAU

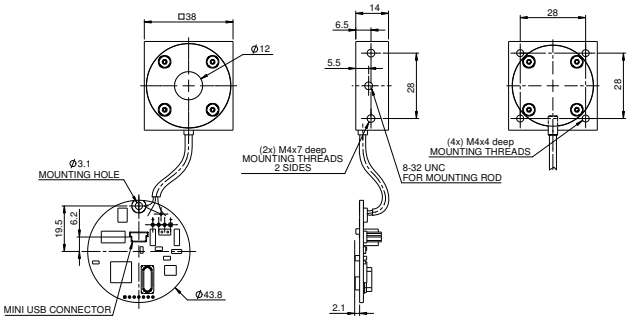

L30C-UAU

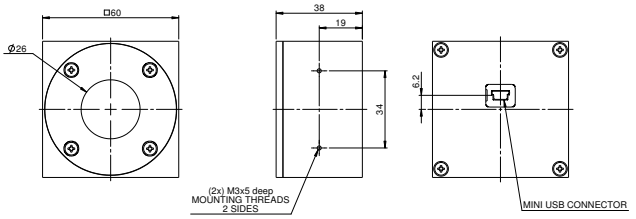

100C-UAU

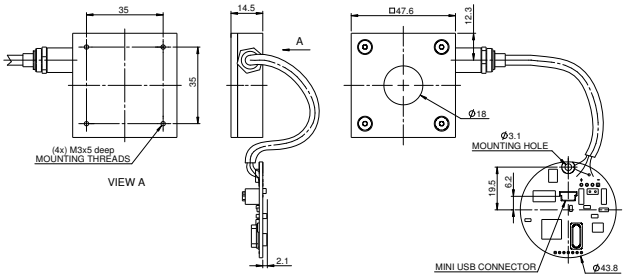

150C-UAU

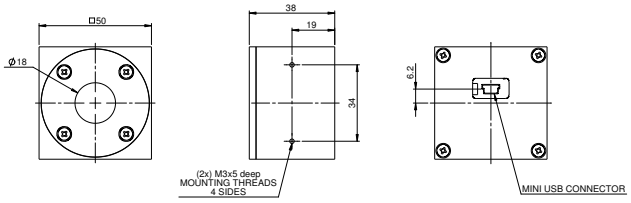

150W-UAU

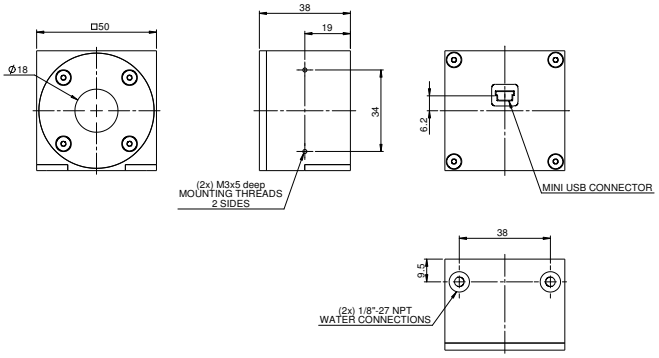

L150C-UAU

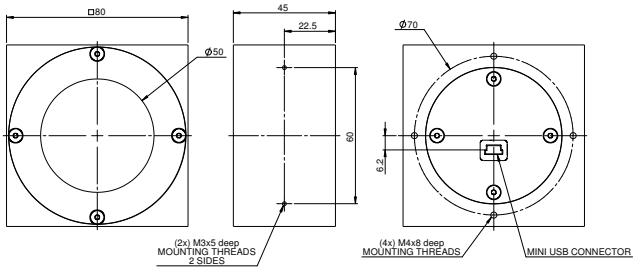

L250W-UAU / L300W-UAU

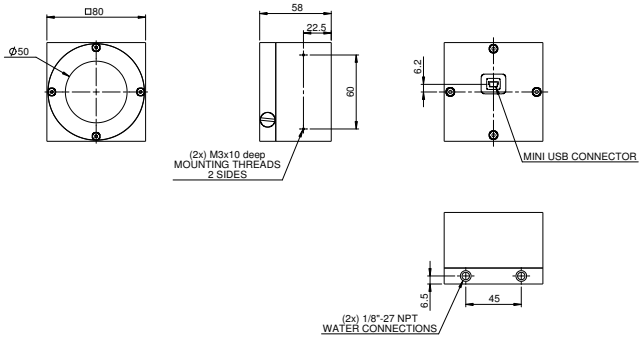
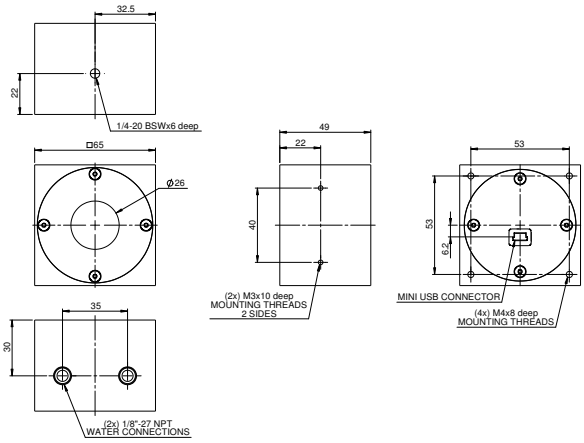
600W-UAU