1.1.2.3 Low Power Thermal Sensors

1.1.2.3.1 Low Power BeamTrack-Power / Position / Size Sensors

100µW to 10W

Features (see introduction in pages 117-119)

- All the features of standard power sensors plus...
- Accurate tracking of beam position to fractions of a mm
- Monitoring of the laser beam size

3A-BB-10-QUAD / 3A-P-QUAD

10A-BB-16-PPS

Model	3A-BB-10-QUAD [a]	3A-P-QUAD [a]	10A-BB-16-PPS [a]
Use	**General purpose**	**Short pulses**	**Low power**
Functions	Power / Energy / Position	Power / Energy / Position	Power / Energy / Position / Size
Absorber Type	Low power broadband	P type	Broadband
Spectral Range µm	0.19 - 11	0.15 - 8	0.19 - 11
Aperture mm	Ø9.5mm	Ø12mm	Ø16mm
Power Mode			
Power Range	100µW - 3W	160µW - 3W	20mW - 10W
Power Scales	3W to 300µW	3W to 300µW	10W / 5W / 0.5W
Power Noise Level	5µW	10µW	1mW
Thermal Drift (30min)%	10 - 40µW [b]	10 - 40 µW [b]	NA
Maximum Average Power Density kW/cm^2	1	0.05	28
Response Time with Meter (0-95%) typ. s	1.8	2.5	0.8
Calibration Uncertainty ±%	1.9	1.9	1.9
Power Accuracy ±% [g]	3	3	3 [h]
Linearity with Power ±%	1	1	1
Energy Mode			
Energy Range	20µJ - 2J	30µJ - 2J	6mJ - 2J
Energy Scales	2J to 200µJ	2J to 200µJ	2J / 200mJ
Minimum Energy	20µJ	30µJ	6mJ
Maximum Energy Density J/cm^2 [f]			
7ns	0.3	1	0.3
0.5ms	1	1	2
2ms	2	1	2
10ms	4	1	2
Beam Tracking Mode			
Position			
Beam Position Accuracy mm [c]	0.15	0.15	0.15
Beam Position Resolution mm	0.02	0.02	0.02
Min Power for Position Measurement	300µW	400µW	50mW
Size [d]			
Size Accuracy [e]	NA	NA	±(5%+50µm) for centered beam
Size Range mm (4σ beam diameter)	NA	NA	1.5 - 10
Min Power for Size Measurement	NA	NA	50mW
Cooling	Convection	Convection	Convection
Weight kg	0.3	0.3	0.3
Fiber Adapter Available (see page 126)	ST, FC, SMA, SC	ST, FC, SMA, SC	ST, FC, SMA, SC
Compliance	CE, UKCA, China RoHS	CE, UKCA, China RoHS	CE, UKCA, China RoHS
Version	V1		V1
Part number: Standard Sensor	**7Z07939**	**7Z07935**	**7Z07905 (1.5m cable)**
Sensor with different cable length			**7Z07905B (5m cable)**

Note: (a) The BeamTrack features are supported by Centauri, StarBright, StarLite, Nova II and Vega meters, Juno, Juno+, Juno-RS and EA-1 interfaces and StarLab application. Position and Size measurements work only in Power mode (but not in single shot Energy mode).

Note: (b) Depending on room airflow and temperature variations.

Note: (c) For position within inner 30% of aperture. Position measuring center corresponds to geometrical center within <1mm. Position center can be software reset to geometric center or other desired position with Centauri, StarBright or StarLab.

Note: (d) Assumes laser beam with circular Gaussian (TEM_{00}) distribution. For other modes, size measurement is relative.

Note: (e) Accuracy spec will be maintained for beams ≥1.8 mm not deviating from center by more than 15% of beam diameter.

Note: (f) **For P and BB** types and shorter wavelengths derate maximum energy density as follows:

Wavelength	**P Type**	**Low Power Broadband (BB) Type**
1064nm	Derate to value	Below 400 nm derate to 30% of the above value
532nm	not derated	
355nm	40% of stated value	
266nm	10% of stated value	
193nm	10% of stated value	

Note: (g) The 3A-BB-10-QUAD has a relatively large spectral variation in absorption and has a calibrated spectral curve at all wavelengths in its spectral range to the above specified accuracy. Nova and LaserStar meters do not support this feature and when used with those meters, the accuracy will be ±3% as above for 532nm, 905nm, 1064nm and 10.6µm but there will be an additional error of up to 3% at other wavelengths in the spectral range 190 – 3000nm.

Note: (h) ±4%. For wavelengths <240nm

* For drawings please see page 58

Interface Module on cable

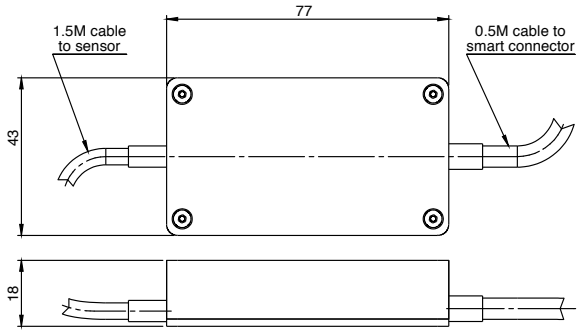

3A-BB-10-QUAD / 3A-P-QUAD

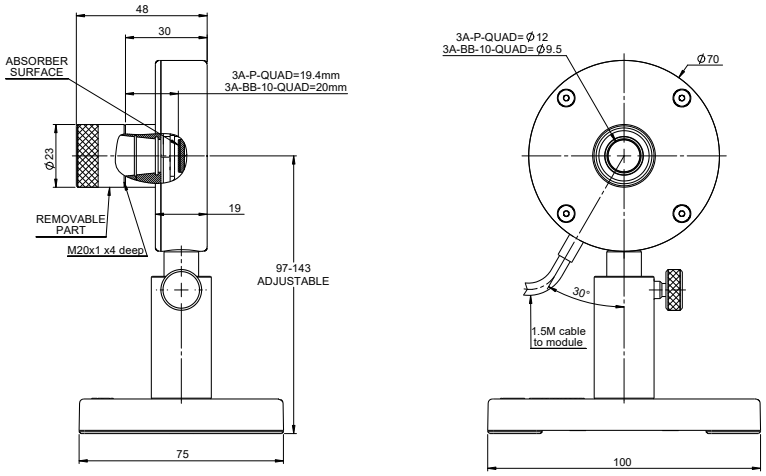
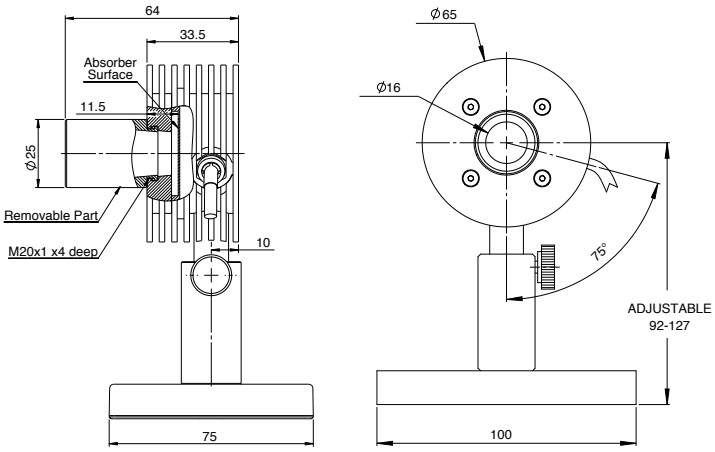
10A-BB-16-PPS