1.2.3 High Energy Pyroelectric Sensors

20µJ to 10J

Features

- Sensors with diffuser for high energies and high energy densities
- Metallic coating for high repetition rates up to 10kHz
- High damage threshold
- Wide spectral range. Measure YAG and harmonics, 355nm and many more
- Measure lasers with pulse widths up to 20ms

PE50-DIF-C

PE25BF-DIF-C

Model	PE50-DIF-C					PE25BF-DIF-C				
Use	**High rep rate. Complete calibration curve**					**Complete calibration curve. High damage threshold**				
Aperture mm	Ø35					Ø20				
Absorber Type	Metallic with diffuser					BF with diffuser				
Spectral Range µm [a]	0.355 - 2.2, 2.94					0.355 - 2.2				
Surface Reflectivity % approx.	25					25				
Calibration Uncertainty ±% [a]	3					3				
Max Pulse Width Setting [d]	2µs	30µs	500µs	1ms	5ms	1ms	2ms	5ms	10ms	20ms
Energy Scales	10J to 200µJ	10J to 200µJ	10J to 2mJ	10J to 2mJ	10J to 20mJ	10J to 2mJ	10J to 2mJ	10J to 20mJ	10J to 20mJ	10J to 20mJ
Lowest Measurable Energy µJ [c]	20	20	100	120	200	100	150	200	200	300
Max Pulse Width ms	0.002	0.03	0.5	1	5	1	2	5	10	20
Maximum Pulse Rate pps	10kHz	5kHz	900Hz	450Hz	100Hz	250Hz	100Hz	50Hz	40Hz	20Hz
Noise on Lowest Range µJ	1	2	20	20	40	15	30	40	40	60
Additional Error with Frequency %	±2% to 2kHz ±4.5% to 5kHz	±2%	±1% to 750Hz	±2% to 400Hz	±1% to 80Hz	±1% to 100Hz ±2.5% to 150Hz ±4.5% to 250Hz	±1%	±1%	±1%	±2%
Linearity with Energy for >10% of full scale [c]	±1.5%					±2%				
Damage Threshold J/cm² [b]										
7ns	1					4				
1µs	2					5				
300µs	20					20				
2ms	40					60				
Maximum Average Power W	25, 40 with optional heat sink (P/N 7Z08267)					20, 30 with optional heat sink (P/N 7Z08267)				
Maximum Average Power Density W/cm²	100					120				
Uniformity over surface	±2.5% over central 20mm					±2.5% over central 10mm				
Weight kg	0.25					0.25				
Compliance	CE, UKCA, China RoHS					CE, UKCA, China RoHS				
Version										
Part Number: Standard Sensor	**7Z02939 (1.5m cable)**					**7Z02941**				
Sensor with different cable length	**7Z02939B (5m cable), 7Z02939C (10m cable)**									
Note: (a) Calibration curve is verified and adjusted at specified wavelengths.	Specified wavelengths: 355nm, 532nm, 1064nm and 2100nm.					Specified wavelengths: 355nm, 532nm, 1064nm and 2100nm.				
At other wavelengths, there may be an additional error up to the value given.	Max additional error at other wavelengths not specified above: ±2%. <250nm not calibrated.					Max additional error at other wavelengths not specified above: ±2%. <250nm not calibrated.				
Note: (b)	For wavelengths >2.1µm, derate to 40% of above values. For beam size ≤5mm. For 10mm beam, derate to 40% of above value.					For wavelengths below 600nm, derate to 60% of given values. For beam size ≤4mm. For 8mm beam, derate to 50% of above values.				

Note: (c) With the "user threshold" setting set to minimum. For other settings, the spec is for >10% of full scale or greater than twice the "user threshold", whichever is greater. The user threshold is not available with LaserStar, Nova, Pulsar, USBI and Quasar. For these meters, the threshold is set to minimum and the linearity spec is >10% of full scale. The PE-C series will only operate with Nova meter with an additional adapter Ophir P/N 7Z08272 (see page 148). The adapter can introduce up to 1% additional measurement error. The user threshold feature allows adjustment of the internal threshold up to 25% of full scale if desired to avoid false triggering in noisy environments. For further information, see the FAQs on our Website.

Note: (d) With the LaserStar, Pulsar, USBI, Quasar and Nova with adapter, only 2 out of 5 pulse widths settings are available; for the PE50-DIF-C model the 2µs (displayed as "30µs") and 1ms settings, and for the PE25BF-DIF-C model the 1ms and 10ms settings.

* For drawings please see page 142

PE25-C / PE25BF-C

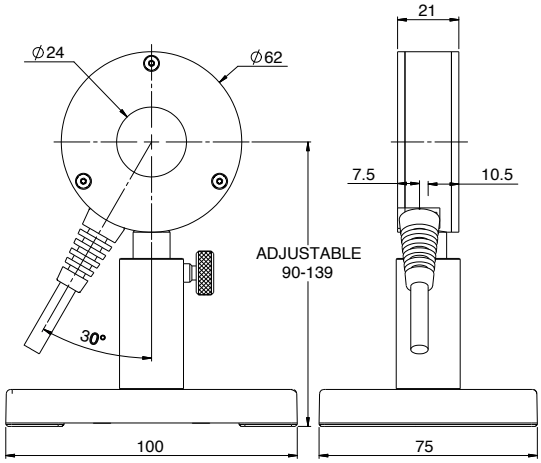

PE50-C / PE50BF-C

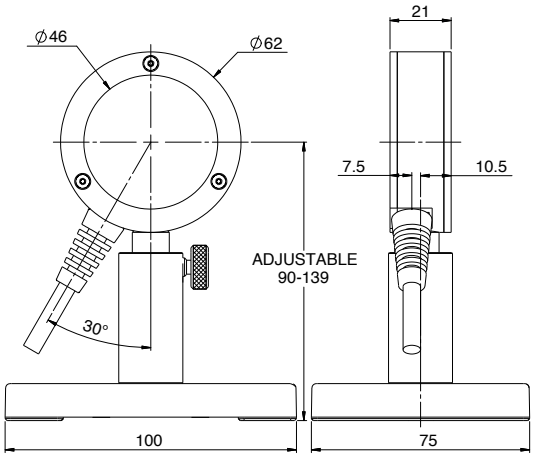

PE25BF-DIF-C

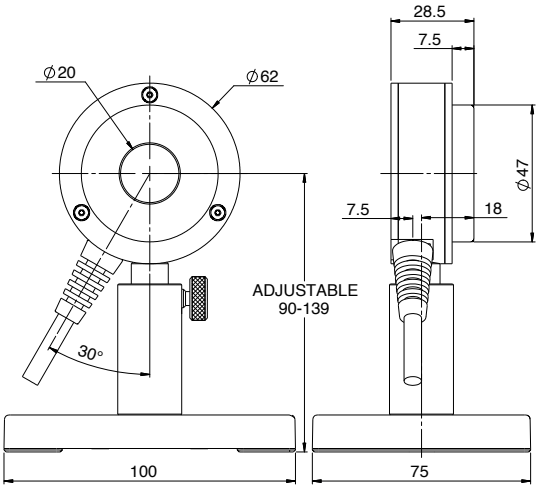

PE50BF-DIF-C / PE50-DIF-C

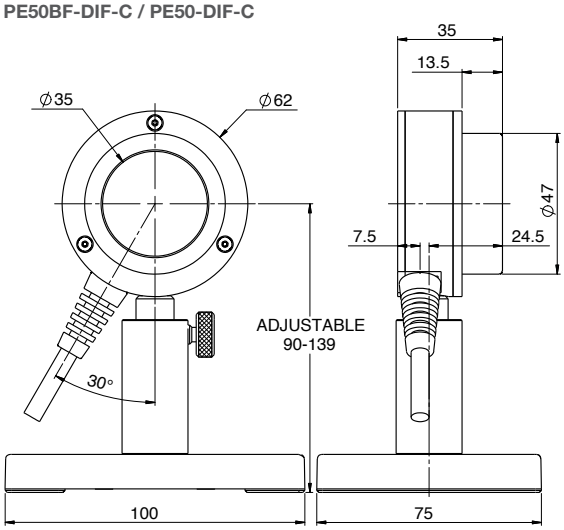

PE50-DIFH2-C / PE50BF-DIFH2-C / PE50-UV-DIFH-C / PE50BF-UV-DIFH-C

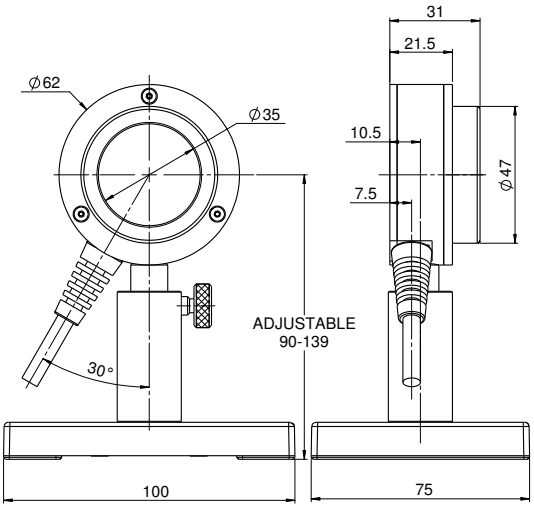
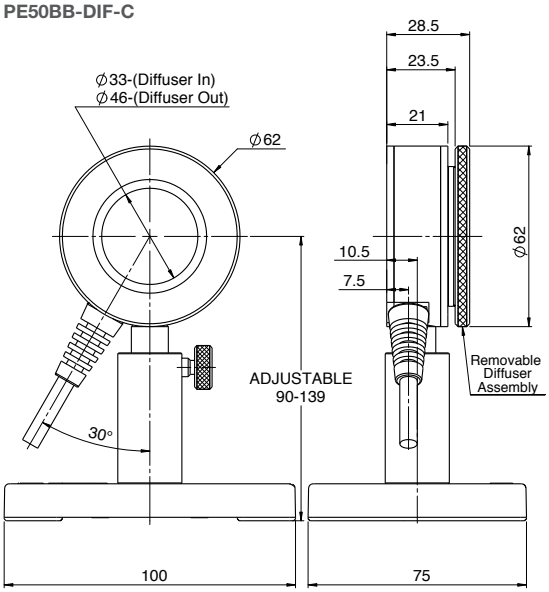
PE50BB-DIF-C