1.1.2.7 High Power Thermal Sensors

1.1.2.7.3 High Power Water Cooled Thermal Sensors

5W to 1000W

Features

- High powers
- Water cooled
- Up to 1000W
- Ø34mm aperture
- 1000WP for non-contaminating water flow

1000W-BB-34

1000WP-BB-34

1000W-LP2-34

Model	1000W-BB-34 / 1000WP-BB-34	1000W-LP2-34
Use	**General purpose and CO_2 laser / Controlled materials in contact with water flow** [c]	**High power densities and long pulses**
Absorber Type	Broadband	LP2
Spectral Range µm	0.19 – 11	0.35 – 2.2
Absorption	~88%	>94% from 0.35 to 1.1µm
Aperture mm	Ø34mm	Ø34mm
Power Mode		
Power Range	5W - 1000W	5W - 1000W
Power Scales	1000W / 200W	1000W / 200W
Power Noise Level	200mW	200mW
Maximum Average Power Density kW/cm²	10 at 500W 7 at 1000W	12 at 500W 10 at 1000W
Response Time with Meter (0-95%) typ. s	2.5	2.5
Calibration Uncertainty ±%	1.9	1.9
Power Accuracy ±%	3 [a]	3 [a]
Linearity with Power ±%	2	2
Energy Mode		
Energy Range	400mJ - 300J	400mJ - 300J
Energy Scales	300J / 30J	300J / 30J
Minimum Energy mJ	400mJ	400mJ
Maximum Energy Density J/cm²		
7ns	0.3	0.1
1µs	0.4	0.9
0.5ms	5	50
2ms	10	130
10ms	30	400
Cooling	water	water
Minimum and Recommended water flow at full power [b]	3 liter/min 6 liter/min	3 liter/min 6 liter/min
Fiber Adapters	Consult Ophir representative	Consult Ophir representative
Accessories for High Power Sensors	See pages 113-116	See pages 113-116
Weight kg	0.8 / 0.9	0.8
Compliance	CE, UKCA, China RoHS	CE, UKCA, China RoHS
Version	V3 / NA	
Part number: Standard Sensor	**7Z02750 / 7Z02753**	**7Z02774**
BeamTrack Sensor: Beam Position & Size (p. 80)	**7Z07936**	
Notes: (a)	Calibrated for ~0.8µm, 1.064µm and 10.6µm	For spectral range 0.35 to 1.1µm
Notes: (b)	Water temperature range 18-30°C. Water temperature rate of change <1°C/min. Pressure drop across sensor 0.03MPa. The recommended flow rate can be lowered proportionately at lower than full power but should not be below the minimum. When used at full power with substantially below the recommended flow rate, the damage threshold may be as much as 20% lower. The response time will be optimum with the recommended flow rate.	
Notes: (c)	The 1000WP-BB-34 has a nylon rear housing and nothing but nylon and copper in contact with the water flow. This prevents contamination of the water flow with aluminum and prevents the possibility of corrosion.	

* For drawings please see page 85

1000W-BB-34 / 1000W-LP2-34

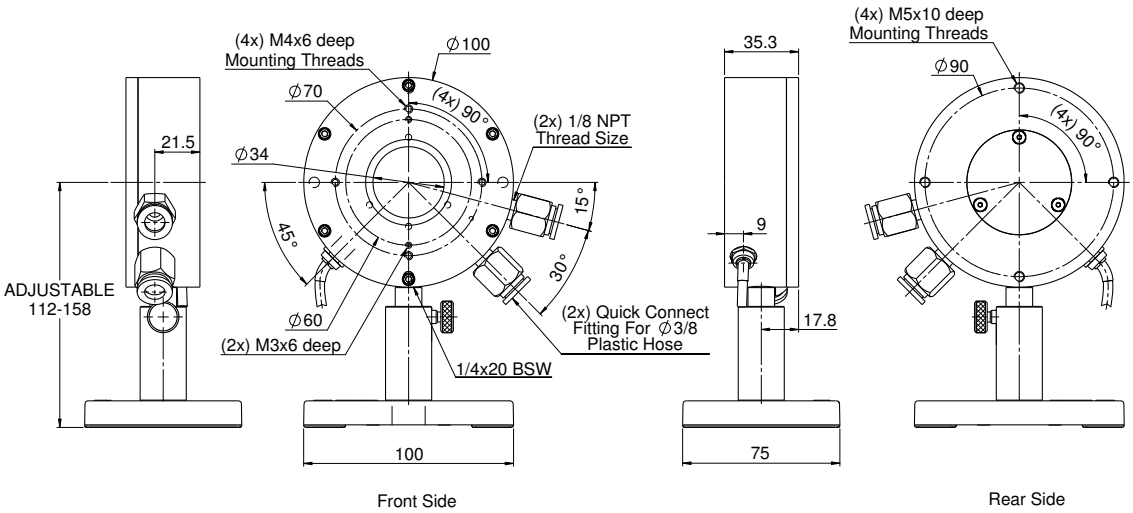
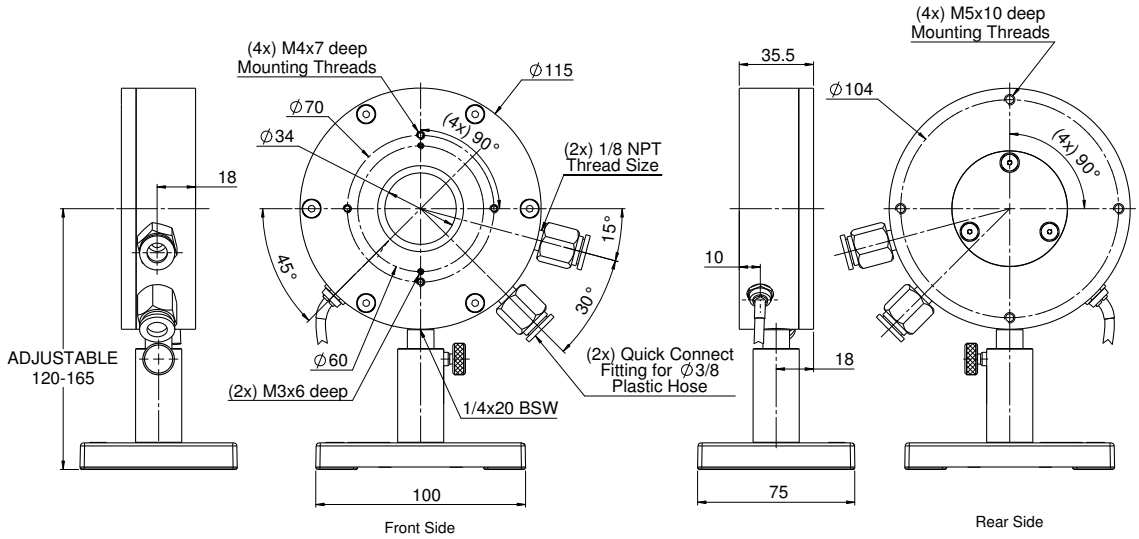
1000WP-BB-34