1.2.3 High Energy Pyroelectric Sensors

100µJ to 10J

Features

- Premium DIFH & DIFH2 energy sensors BF coating for highest damage threshold
- Metallic coating for high repetition rates up to 10kHz
- Measure lasers with pulse widths up to 20ms
- Flavors focusing on UV and others focusing on VIS-IR

PE50-DIFH2-C,
PE50BF-DIFH2-C,
PE50-UV-DIFH-C,
PE50BF-UV-DIFH-C

Model	PE50-DIFH2-C					PE50BF-DIFH2-C					PE50-UV-DIFH-C					PE50BF-UV-DIFH-C				
Use	**High repetition lasers requiring high damage threshold**					**Pulsed lasers requiring very high damage threshold**					**High repetition lasers requiring high damage threshold**					**Pulsed lasers requiring very high damage threshold**				
Aperture mm	Ø35					Ø35					Ø35					Ø35				
Absorber Type	Metallic with diffuser					BF with diffuser					Metallic with UV diffuser					BF with UV diffuser				
Spectral Range µm [a]	0.355 – 2.2, 2.94					0.355 – 2.2, 2.94					0.193 - 0.355					0.193 - 0.355				
Surface Reflectivity % approx.	35					35					25					25				
Calibration Uncertainty ±% [a]	3					3					3					3				
Max Pulse Width Setting [d]	2µs	30µs	500µs	1ms	5ms	1ms	2ms	5ms	10ms	20ms	2µs	30µs	500µs	1ms	5ms	1ms	2ms	5ms	10ms	20ms
Energy Scales	10J to 2mJ	10J to 2mJ	10J to 2mJ	10J to 2mJ	10J to 20mJ	10J to 2mJ	10J to 2mJ	10J to 20mJ	10J to 20mJ	10J to 20mJ	10J to 2mJ	10J to 2mJ	10J to 2mJ	10J to 2mJ	10J to 20mJ	10J to 2mJ	10J to 2mJ	10J to 20mJ	10J to 20mJ	10J to 20mJ
Lowest Measurable Energy mJ [c]	0.1	0.1	0.1	0.1	0.1	0.2	0.4	0.8	0.8	0.8	0.1	0.1	0.1	0.1	0.1	0.2	0.4	0.8	0.8	0.8
Max Pulse Width ms	0.002	0.03	0.5	1	5	1	2	5	10	20	0.002	0.03	0.5	1	5	1	2	5	10	20
Maximum Pulse Rate pps	10kHz	5kHz	900Hz	450Hz	100Hz	250Hz	100Hz	50Hz	40Hz	20Hz	10kHz	5kHz	900Hz	450Hz	100Hz	250Hz	100Hz	50Hz	40Hz	20Hz
Noise on Lowest Range µJ	10	10	10	10	20	40	80	200	200	200	10	10	10	10	20	40	80	200	200	200
Additional Error with Frequency %	±1.5%	±1.5%	±1% to 900Hz	±1% to 450Hz	±1% to 100Hz	±1% to 100Hz ±2.5% to 150Hz ±4.5% to 250Hz	±1%	±1%	±2%	±2%	±1.5%	±1.5%	±1% to 900Hz	±1% to 450Hz	±1% to 100Hz	±1% to 100Hz ±2.5% to 150Hz ±4.5% to 250Hz	±1%	±1%	±2%	±2%
Linearity with Energy for >10% of full scale (for Metallic) and >7% of full scale (for BF) [c]	±1.5%					±2%					±1.5%					±2%				
Maximum Energy Density J/cm² [b]																				
7ns	3					8					2					3				
1µs	15					17					8					8				
300µs	75					75					35					35				
2ms	200					200					95					95				
Maximum Average Power W	25, 40 with optional heat sink (P/N 7Z08267)					25, 40 with optional heat sink (P/N 7Z08267)					25, 40 with optional heat sink (P/N 7Z08267)					25, 40 with optional heat sink (P/N 7Z08267)				
Maximum Average Power Density W/cm²	200					200					200					200				
Uniformity over surface	±2.5% over central 20mm					±2.5% over central 20mm					±2.5% over central 20mm					±2.5% over central 20mm				
Weight kg	0.25					0.25					0.25					0.25				
Compliance	CE, UKCA, China RoHS					CE, UKCA, China RoHS					CE, UKCA, China RoHS					CE, UKCA, China RoHS				
Version																				
Part Number: Standard Sensor	**7Z02958**					**7Z02959 (1.5m cable)**					**7Z02960**					**7Z02961**				
Sensor with different cable length						**7Z02959B (5m cable)**														
Note: (a) Calibration curve is verified and adjusted at specified wavelengths.	Specified wavelengths: 355nm, 532nm, 1064nm, 2100nm and 2940nm.					Specified wavelengths: 355nm, 532nm, 1064nm, 2100nm and 2940nm.					Specified wavelengths: 193nm, 248-266nm and 355nm.					Specified wavelengths: 193nm, 248-266nm and 355nm.				
At other wavelengths, there may be an additional error up to the value given.	Max additional error at other wavelengths not specified above: ±2%.					Max additional error at other wavelengths not specified above: ±2%.					Max additional error at 193nm ±4%. Max additional error at other wavelengths not specified above: ±2% 193nm reading may need 1min irradiation to stabilize. In order to avoid measurement degradation extra care must be taken to protect sensor from contaminants.					Max additional error at 193nm ±4%. Max additional error at other wavelengths not specified above: ±2%. In order to avoid measurement degradation extra care must be taken to protect sensor from contaminants.				
Note: (b)	For wavelengths >2.2µm, derate to 10% of above values. For wavelengths below 500nm, derate to 40% of given values. For beam size ≤5mm. For 10mm beam, derate to 60% of above values.					For wavelengths >2.2µm, derate to 10% of above values. For wavelengths below 500nm, derate to 40% of given values. For beam size ≤5mm. For 10mm beam, derate to 60% of above.					For wavelengths <300nm, derate to 50% of given values For beam size ≤5mm. For 10mm beam, derate to 60% of above.					For wavelengths <300nm and pulses 7ns, derate to 33% of given values, for longer pulses derate to 50% of given values. For beam size ≤5mm. For 10mm beam, derate to 60% of above.				

Note: (c) With the "user threshold" setting set to minimum. For other settings, the spec is for >10%/>7% of full scale or greater than twice the "user threshold", whichever is greater. The user threshold is not available with LaserStar, Nova, Pulsar, USBI and Quasar. For these meters, the threshold is set to minimum and the linearity spec is >10% of full scale. The PE-C series will only operate with Nova meter with an additional adapter Ophir P/N 7Z08272 (see page 148). The adapter can introduce up to 1% additional measurement error. The user threshold feature allows adjustment of the internal threshold up to 25% of full scale if desired to avoid false triggering in noisy environments.
For further information, see the FAQs on our Website.

Note: (d) With the LaserStar, Pulsar, USBI, Quasar and Nova with adapter only 2 out of 5 pulse width settings are available. For PE50BF-DIFH2-C & PE50BF-UV-DIFH-C sensors the 1ms and 10ms settings and for PE50-DIFH2-C & PE50-UV-DIFH-C sensors the 2µs (displayed as "30µs") and 1ms settings. Furthermore, with the diffuser mounted, the sensor may saturate at lower than the maximum energy in some cases. Therefore it is recommended to use these sensors with the newer meters/PC interfaces.

* For drawings please see page 142

PE25-C / PE25BF-C

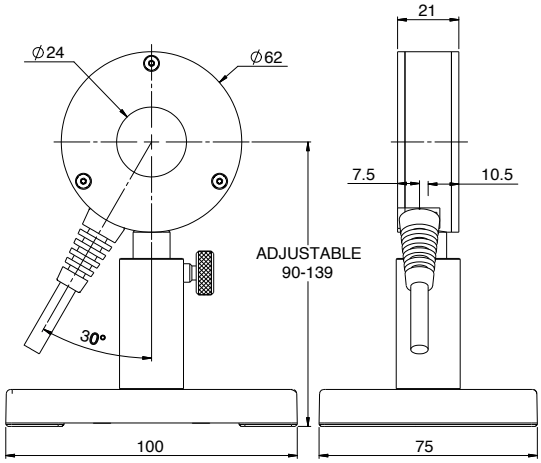

PE50-C / PE50BF-C

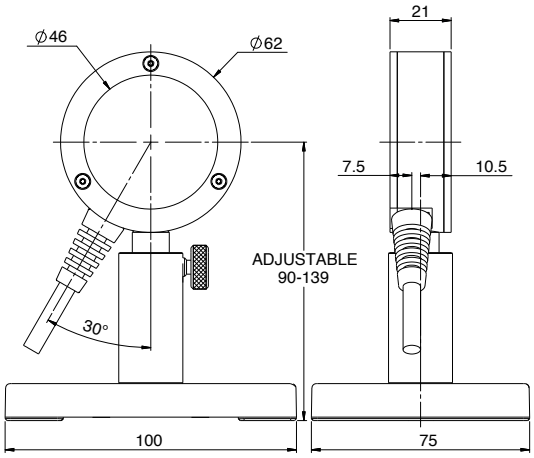

PE25BF-DIF-C

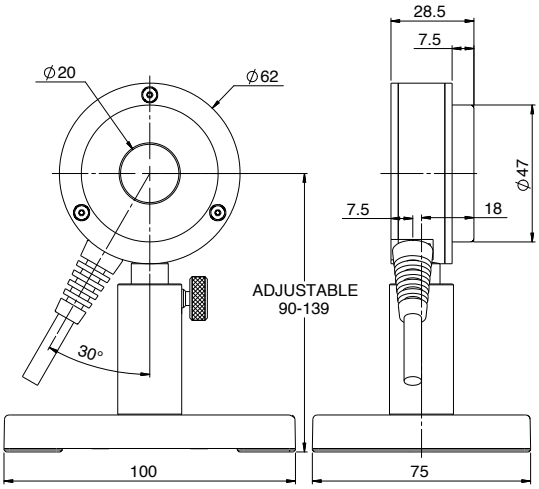

PE50BF-DIF-C / PE50-DIF-C

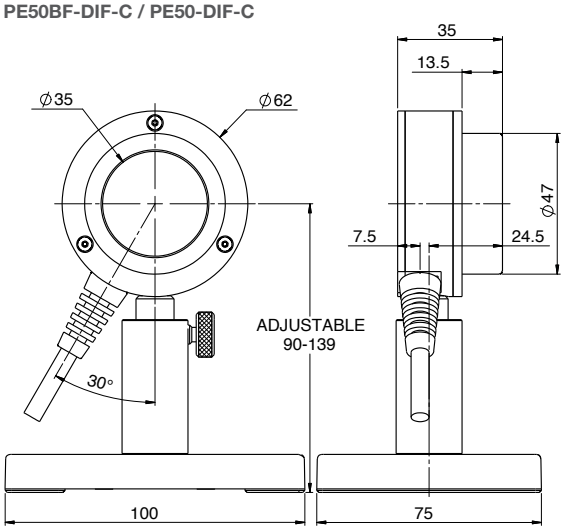

PE50-DIFH2-C / PE50BF-DIFH2-C / PE50-UV-DIFH-C / PE50BF-UV-DIFH-C

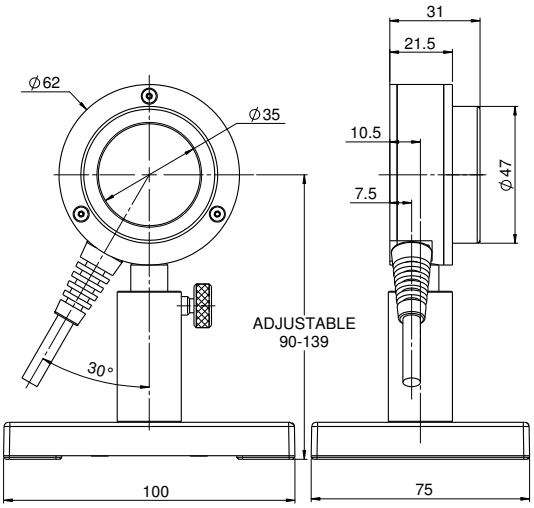
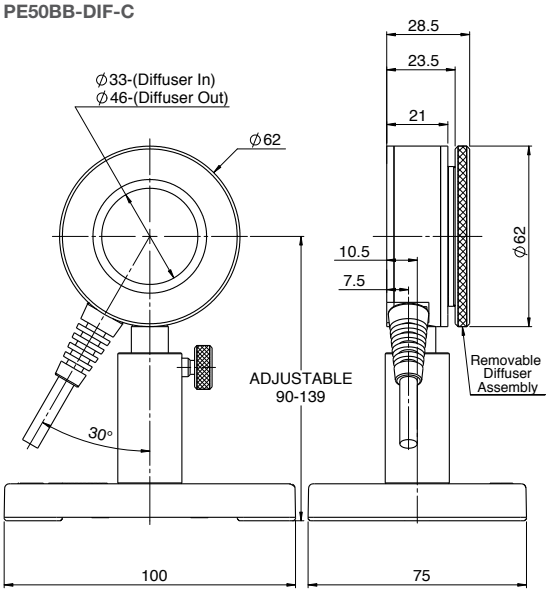
PE50BB-DIF-C