1.2.3 High Energy Pyroelectric Sensors

100µJ to 40J

Features

- Sensors with diffuser for high energies and high energy densities
- BF coating for highest damage threshold
- BB coating for spectral flatness
- Wide spectral range. Measure YAG and harmonics and many more.
- Rep rates up to 250Hz
- Measure lasers with pulse widths up to 20ms

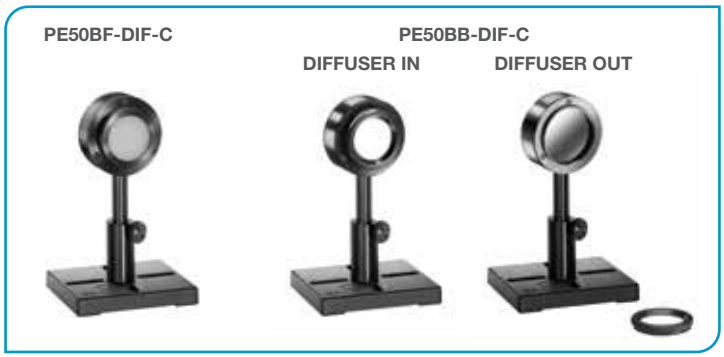

Model	PE50BF-DIF-C					PE50BB-DIF-C					
Use	**Complete calibration curve. Highest damage threshold**					**Removable diffuser. Spectrally flat**					
Diffuser	Fixed					Diffuser out			Diffuser in		
Aperture mm	Ø35					Ø46			Ø33		
Absorber Type	BF with diffuser					BB			BB with diffuser		
Spectral Range µm [a]	0.355 – 2.2, 2.94					0.19 – 11			0.4 – 2.5		
Surface Reflectivity % approx.	25					5			15		
Calibration Uncertainty ±% [a]	3					3			3		
Max Pulse Width Setting [d]	1ms	2ms	5ms	10ms	20ms	3ms	10ms	20ms	3ms	10ms	20ms
Energy Scales	10J to 2mJ	10J to 2mJ	10J to 20mJ	10J to 20mJ	10J to 20mJ	10J to 2mJ	10J to 20mJ	10J to 20mJ	40J to 8mJ	40J to 8mJ	40J to 8mJ
Lowest Measurable Energy mJ [c]	0.2	0.4	0.8	0.8	0.8	0.1	0.1	0.2	0.5	5	5
Max Pulse Width ms	1	2	5	10	20	3	10	20	3	10	20
Maximum Pulse Rate pps	250Hz	100Hz	50Hz	40Hz	20Hz	40Hz	10Hz	5Hz	40Hz	10Hz	5Hz
Noise on Lowest Range µJ	40	80	200	200	200	15	15	20	40	60	80
Additional Error with Frequency %	±1% to 100Hz ±2.5% to 150Hz ±4.5% to 250Hz	±1%	±1%	±2%	±2%	±1%	±1%	±1%	±1%	±1%	±1%
Linearity with Energy for >7% of full scale [c]	±2%					±2%					
Maximum Energy Density J/cm² [b]						Diffuser out			Diffuser in		
7ns	4					0.3			3		
1µs	5					0.3			3		
300µs	20					1			10		
2ms	60					2			20		
Maximum Average Power W	25, 40 with optional heat sink (P/N 7Z08267)					10, 15 with optional heat sink (P/N 7Z08267)			30, 50 with optional heat sink (P/N 7Z08267)		
Maximum Average Power Density W/cm²	200					10			500		
Uniformity over surface	±2.5% over central 20mm					±2% over 70% of diameter			±2.5% over central 20mm		
Weight kg	0.25					0.25					
Compliance	CE, UKCA, China RoHS					CE, UKCA, China RoHS					
Version						V1					
Part Number: Standard Sensor	**7Z02940**					**7Z02962 (1.5m cable)**					
Sensor with different cable length						**7Z02962B (5m cable)**					
Note: (a) Calibration accuracy at various wavelengths as specified here.	Specified wavelengths: 355nm, 532nm, 1064nm and 2100nm.					Calibrated at 1064nm			Calibrated at 1064nm, 532nm and 2100nm only. Calibration accuracy at 2100nm, ±5%.		
At other wavelengths, there may be an additional error up to the value given.	Max additional error at other wavelengths not specified above: ±2%. <250nm not calibrated					Max additional error at other wavelengths is ±2%					
Note: (b)	For wavelengths >2.1µm, derate to 10% of above values. For wavelengths below 600nm, derate to 60% of given values (for DIFH 50% of given values). For wavelengths below 240nm, derate to 1J/cm². For beam size ≤5mm. For 10mm beam, derate DIF to 80% and DIFH to 70% of above.					For wavelengths below 400 nm derate to 30% of the above value.					

Note: (c) With the "user threshold" setting set to minimum. For other settings, the spec is for >7% of full scale or greater than twice the "user threshold", whichever is greater. The user threshold is not available with LaserStar, Nova, Pulsar, USBI and Quasar. For these meters, the threshold is set to minimum and the linearity spec is >10% of full scale. The PE-C series will only operate with Nova meter with an additional adapter Ophir P/N 7Z08272 (see page 148). The adapter can introduce up to 1% additional measurement error. The user threshold feature allows adjustment of the internal threshold up to 25% of full scale if desired to avoid false triggering in noisy environments. For further information, see the FAQs on our Website.

Note: (d) With the LaserStar, Pulsar, USBI, Quasar and Nova with adapter only 2 of the pulse width settings are available. For the PE-BF models the 1ms and 10ms settings and for the PE-BB model the 3ms and 10ms settings. Furthermore, with the diffuser mounted, the sensor may saturate at lower than the maximum energy in some cases. Therefore it is recommended to use these sensors with the newer meters/PC interfaces.

* For drawings please see page 142

PE25-C / PE25BF-C

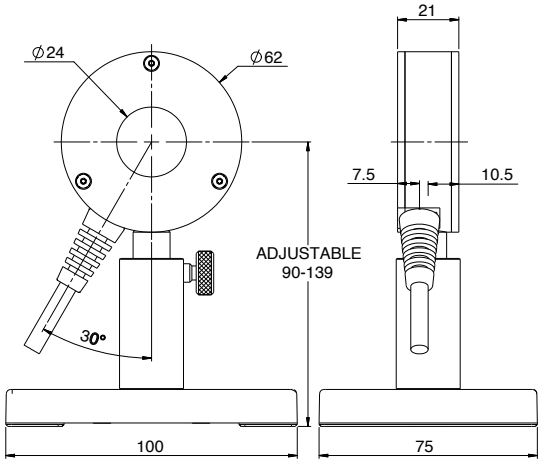

PE50-C / PE50BF-C

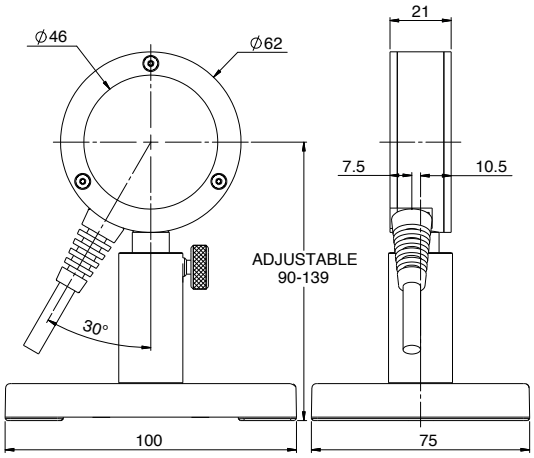

PE25BF-DIF-C

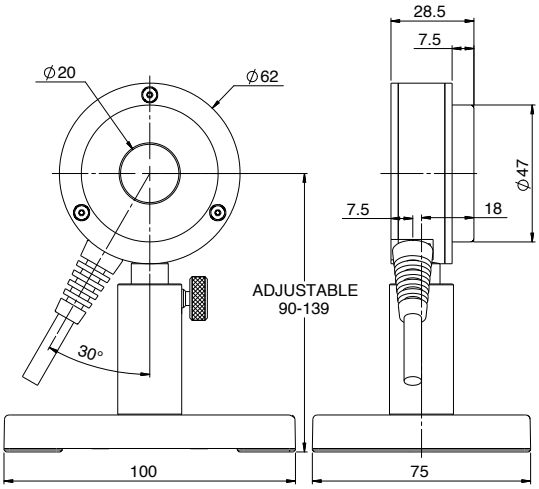

PE50BF-DIF-C / PE50-DIF-C

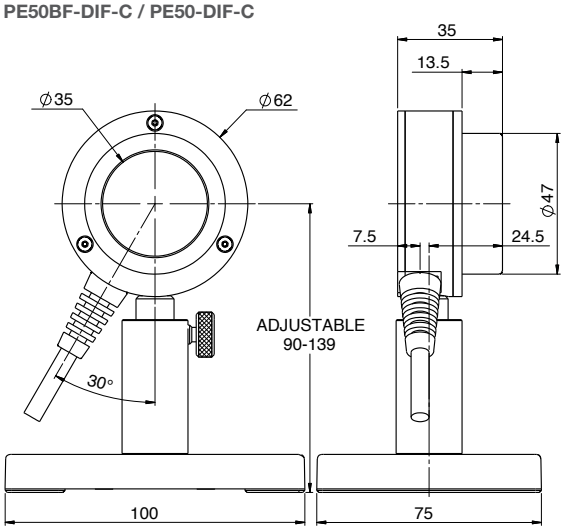

PE50-DIFH2-C / PE50BF-DIFH2-C / PE50-UV-DIFH-C / PE50BF-UV-DIFH-C

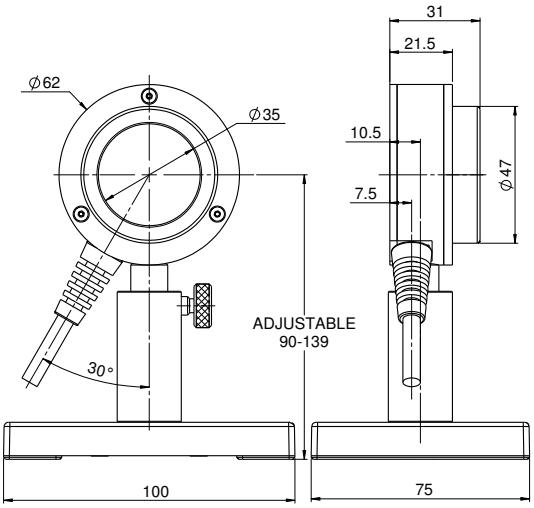
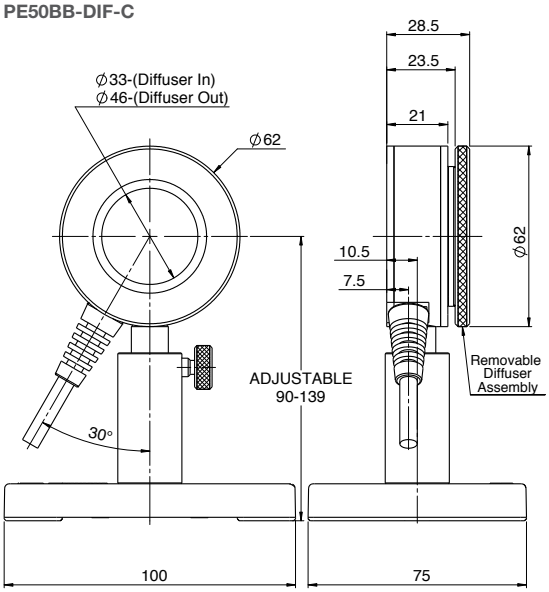
PE50BB-DIF-C