1.1.2.6 Medium - High Power Thermal Sensors

1.1.2.6.1 Medium - High Power BeamTrack-Power / Position / Size Sensors

150mW to 1000W

Features (see introduction in pages 117-119)

- All the features of standard power sensors plus...
- Accurate tracking of beam position to fractions of a mm
- Monitoring of the laser beam size

FL250A-BB-50-PPS

1000W-BB-34-QUAD

Model	FL250A-BB-50-PPS [a]	1000W-BB-34-QUAD [a]
Use	**General purpose**	**General purpose**
Functions	Power / Energy / Position / Size	Power / Energy / Position
Absorber Type	Broadband	Broadband
Spectral Range µm	0.19 – 11	0.19 – 11
Aperture mm	Ø50mm	Ø34mm
Power Mode		
Power Range	150mW - 250W [b]	5W - 1000W
Power Scales	250W / 30W	1000W / 200W
Power Noise Level	15mW	200mW
Maximum Average Power Density kW/cm²	10 at 250W, 12 at 150W	10 at 500W, 7 at 1000W
Response Time with Meter (0-95%) typ. s	2.8	2.5
Calibration Uncertainty ±%	1.9	1.9
Power Accuracy ±%	3	3 [f]
Linearity with Power ±%	1.5	2
Energy Mode		
Energy Range	80mJ - 300J	500mJ – 300J
Energy Scales	300J / 30J / 3J	300J / 30J
Minimum Energy mJ	80	500mJ
Maximum Energy Density J/cm²		
7ns	0.3	0.3
1µs	0.4	0.4
0.5ms	5	5
2ms	10	10
10ms	30	30
Beam Tracking Mode		
Position		
Beam Position Accuracy	0.3mm + 7% of distance from center [c]	0.6mm + 6% of distance from center [h]
Beam Position Resolution mm	0.1	0.1
Min Power for Position Measurement	2W	10W
Size [d]		
Size Accuracy mm [e]	±5% for centered beam	NA
Size Range mm (4σ beam diameter)	Ø5-35	NA
Min Power Density for Size Measurement	3W/cm²	NA
Cooling	Fan	Water
Minimum and Recommended Water Flow Rate at Full Power	NA	3 liter/min 6 liter/min [g]
Fiber Adapter Available (see page 126)	ST, FC, SMA, SC	Consult Ophir representative
Accessories for High Power Sensors	NA	See pages 113-116
Weight kg	0.9	0.9
Compliance	CE, UKCA, China RoHS	CE, UKCA, China RoHS
Version		
Part number	**7Z07902**	**7Z07936**

Note: (a) The BeamTrack features are supported by Centauri, StarBright, StarLite, Nova II and Vega meters, Juno, Juno+, Juno-RS and EA-1 interfaces and StarLab application. Position and Size measurements work only in Power mode (but not in single shot Energy mode).

Note: (b) For powers up to 30W it is recommended to work with the fan off and then the noise level is ~3 times lower. It is also recommended to measure energy with the fan off.

Note: (c) Position accuracy for the central 20mm of the aperture as limited by beam position resolution. Position can be tracked with ±1mm accuracy over central 32mm of the aperture. Accuracy is reduced by a factor of 3 at minimum power. Position measuring center corresponds to geometrical center within <1mm. Position center can be software reset to geometric center or other desired position with Centauri, StarBright or StarLab.

Note: (d) Assumes laser beam with Gaussian (TEM_{00}) distribution. For other modes, size measurement is relative.

Note: (e) Accuracy spec will be maintained for beams from 6 to 35mm not deviating from center more than 15% of beam diameter.

Note: (f) Calibrated for ~0.8µm, 1.064µm and 10.6µm

Note: (g) Water temperature range 18-30°C, Water temperature rate of change <1°C/min. Pressure drop across sensor 0.03MPa.

Note: (h) Position accuracy for the central 10 mm of the aperture as limited by beam position resolution. Position measuring center corresponds to geometrical center within <1mm. Position center can be software reset to geometric center or other desired position with Centauri, StarBright or StarLab.

* For drawings please see page 81

Interface Module on cable

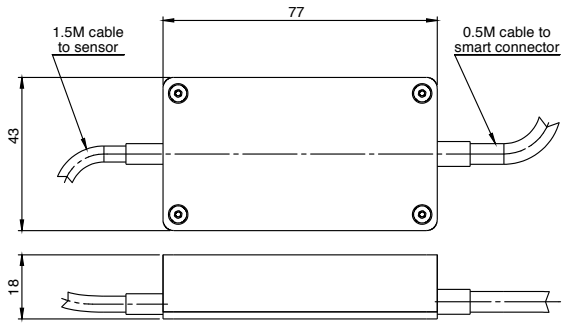

FL250A-BB-50-PPS

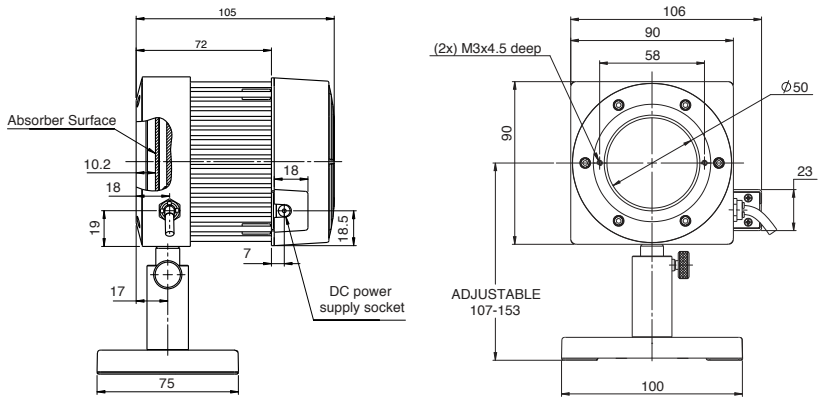
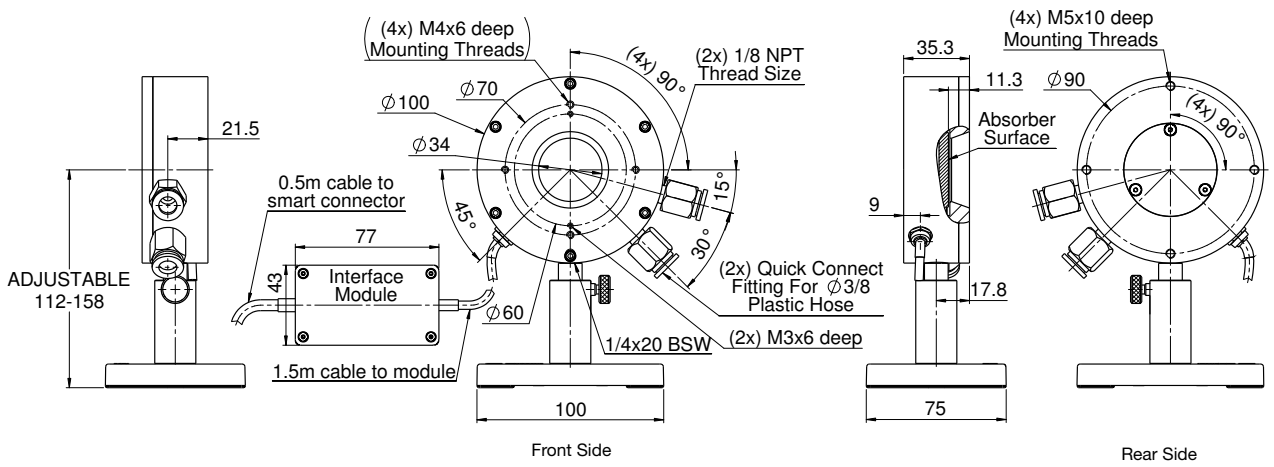
1000W-BB-34-QUAD