1.2.2 Pyroelectric Energy Sensors

10µJ to 10J

Features

- Ø46mm apertures
- Metallic coating for high rep rates
- BF coating for highest damage threshold
- Rep rates up to 10kHz
- Measure lasers with pulse widths up to 20ms

PE50-C

PE50BF-C

Energy Sensor with optional heat sink

Model	PE50-C					PE50BF-C				
Use	**High rep rate**					**High damage threshold**				
Aperture mm	Ø46					Ø46				
Absorber Type	metallic					BF				
Spectral Range µm [a]	0.15 - 3					0.15 - 3, 10.6 [e]				
Surface Reflectivity % approx.	50					20				
Calibration Uncertainty ±% [a]	3					3				
Max Pulse Width Setting [d]	2µs	30µs	500µs	1ms	5ms	1ms	2ms	5ms	10ms	20ms
Energy Scales	10J to 200µJ	10J to 200µJ	10J to 2mJ	10J to 2mJ	10J to 2mJ	10J to 2mJ	10J to 2mJ	10J to 20mJ	10J to 20mJ	10J to 20mJ
Lowest Measurable Energy µJ [c]	10	10	60	80	100	120	300	600	600	600
Max Pulse Width ms	0.002	0.03	0.5	1	5	1	2	5	10	20
Maximum Pulse Rate pps	10kHz	5kHz	900Hz	450Hz	100Hz	250Hz	100Hz	50Hz	40Hz	20Hz
Noise on Lowest Range µJ	0.5	1	6	10	20	30	60	100	100	100
Additional Error with Frequency %	±2% to 2kHz ±4.5% to 5kHz	±2%	±2% to 750Hz	±2% to 400Hz	±1% to 80Hz	±1% to 100Hz ±2.5% to 150Hz ±4.5% to 250Hz	±1%	±1%	±1%	±2%
Linearity with Energy for >7% of full scale [c]	±1.5%					±2%				
Damage Threshold J/cm² [b]										
7ns	0.1					0.8				
1µs	0.2					1				
300µs	2					4				
2ms	6					10				
Maximum Average Power W	15, 25 with optional heat sink (P/N 7Z08267)					15, 25 with optional heat sink (P/N 7Z08267)				
Maximum Average Power Density W/cm²	20					20				
Uniformity over surface	±2% over central 50% of aperture					±2% over central 50% of aperture				
Fiber Adapters Available (see page 147)	ST, FC, SMA, SC					ST, FC, SMA, SC				
Weight kg	0.25					0.25				
Compliance	CE, UKCA, China RoHS					CE, UKCA, China RoHS				
Version										
Part Number: Standard Sensor	**7Z02936**					**7Z02934 (1.5m cable)**				
Sensor with different cable length						**7Z02934A (3m cable)**				
Note: (a) Calibration curve is verified and adjusted at specified wavelengths. At other wavelengths, there may be an additional error up to the value given.	Specified wavelengths: 248-266nm, 355nm and 1064nm. Max additional error at 2940nm ±3%. Max additional error at other wavelengths: ±2%. <240nm not calibrated. In order to avoid measurement degradation at UV wavelengths extra care must be taken to protect sensor from contaminants.					Specified wavelengths: 193nm, 248-266nm, 355nm, 532nm and 1064nm. Max additional error at 2940nm ±3%. Max additional error at other wavelengths: ±2%.				
Note: (b)						For wavelengths below 600nm, derate damage threshold to 60% of given values. Below 300nm, derate to 40% of given values.				

Note: (c) With the "user threshold" setting set to minimum. For other settings, the spec is for >7% of full scale or greater than twice the "user threshold", whichever is greater.
The user threshold is not available with LaserStar, Nova, Pulsar, USBI and Quasar. For these meters, the threshold is set to minimum and the linearity spec is >10% of full scale. The PE-C series will only operate with Nova meter with an additional adapter Ophir P/N 7Z08272 (see page 148). The adapter can introduce up to 1% additional measurement error.
The user threshold feature allows adjustment of the internal threshold up to 25% of full scale if desired to avoid false triggering in noisy environments.
For further information, see the FAQs on our Website.

Note: (d) With the LaserStar, Pulsar, USBI, Quasar and Nova with adapter, only 2 out of 5 pulse widths settings are available; for the PE50-C model the 2µs (displayed as "10µs") and 1ms settings, and for the PE50BF-C model the 1ms and 10ms settings.

Note: (e) If the sensor is set to the 1064nm wavelength, then when measuring 10.6µm pulses, the reading will be approximately 1.19X the correct reading. If you use the attenuate function and set the attenuation to read 0.84, then you will have the correct reading at 10.6µm. The additional error at 10.6µm is ±5%.

* For drawings please see page 142

PE25-C / PE25BF-C

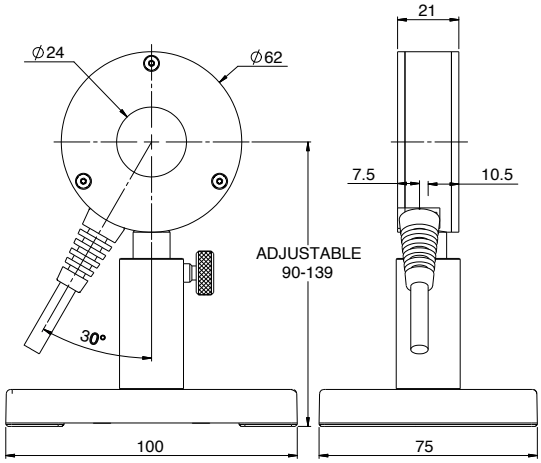

PE50-C / PE50BF-C

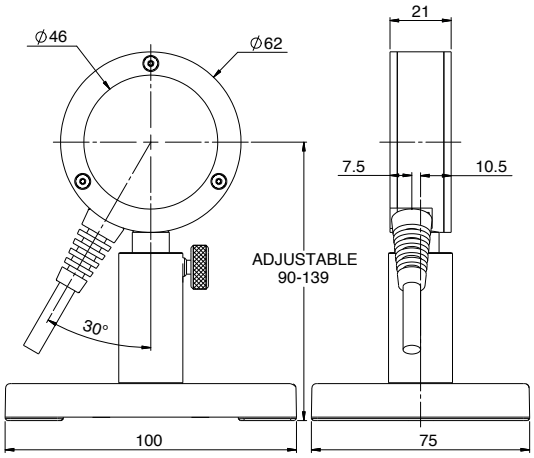

PE25BF-DIF-C

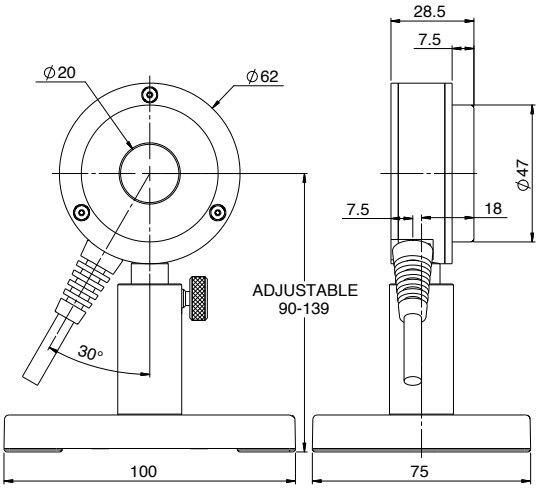

PE50BF-DIF-C / PE50-DIF-C

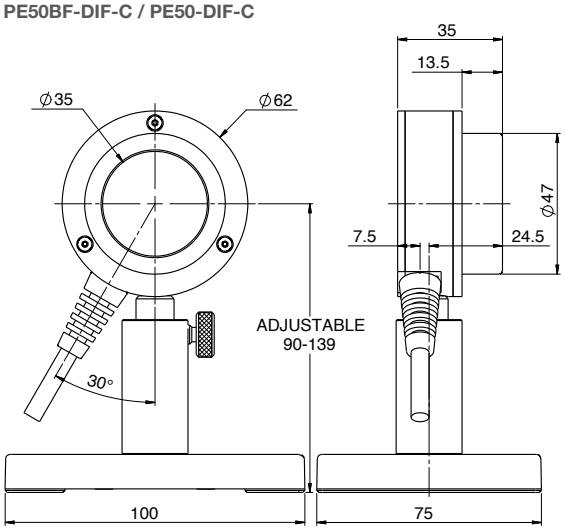

PE50-DIFH2-C / PE50BF-DIFH2-C / PE50-UV-DIFH-C / PE50BF-UV-DIFH-C

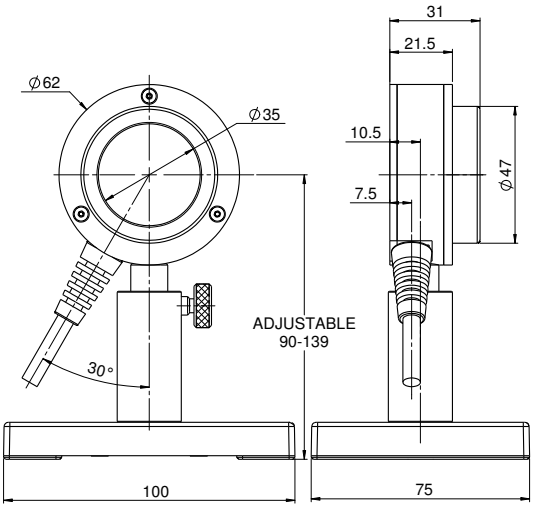
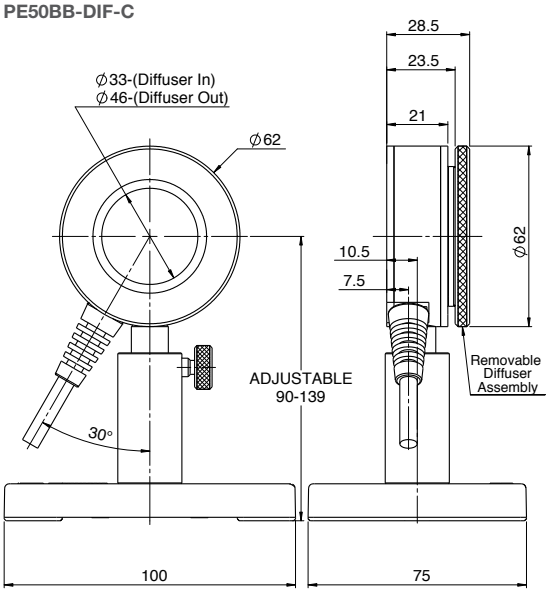
PE50BB-DIF-C